After installing this lift kit, the front wheels must be properly aligned. Failure to properly align the front wheels may result in decreased ability to control the Golf Cart which may result in a rollover or crash.

SGC HD A-ARM LIFT KIT

FITS CLUB CAR PRECEDENT

SGC HD A-ARM LIFT KIT INSTALLATION INSTRUCTIONS
CLUB CAR PRECEDENT

After installing this lift kit, the front wheels must be properly aligned. Failure to properly align the front wheels may result in decreased ability to control the golf cart which may result in a rollover or crash.

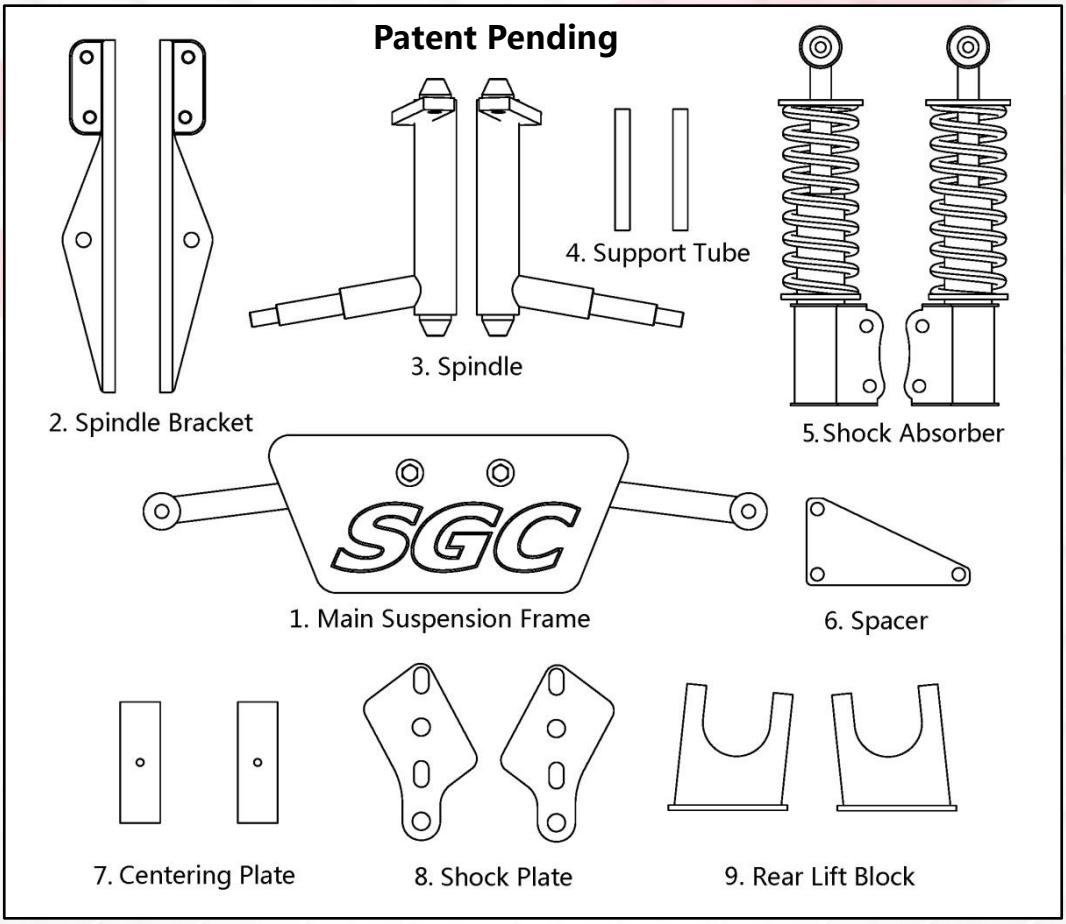

	#	APPLICATION	PATTERN	SPEC.	QTY
FRONT SUSPENSION	10	A-ARM TO SPINDLE BRACKET (come with A-arm on main suspension frame as indicated in step 7.)	HEX BOLT	M12*100	2
			FLAT WASHER	M12	4
			LOCK NUT	M12	2
	11	SPINDLE BRACKET TO SHOCK ABSORBER	HEX BOLT	3/8-16*2 1/4	4
			FLAT WASHER	3/8	8
			LOCK NUT	3/8-16	4
	12	RACK AND PINION	FLANGE BOLT	M8*50	3
	13	ROD-END BERAING TO SPINDLE	EGG NECK BOLT	1/2-20*50	4
		ROD-END BERAING TO SPINDLE BRACKET	NUT	1/2-20	6
		SPINDLE	HEIM JOINT		4
REAR SUSPENSION	14	REAR LIFT BLOCK	HEX BOLT	7/16-14*7 1/8	4
			LOCK NUT	7/16	4
			FLAT WASHER	7/16	8
	15	CENTERING PLATE	HEX BOLT	1/4-1/2	2
			FLAT WASHER	1/4	4
			LOCK NUT	1/4	2

Reserve the right to change the parameters without prior notice.

To begin, be sure to engage the parking brake and switch your cart to “off”. Also make sure RUN/TOW switch is in TOW position.

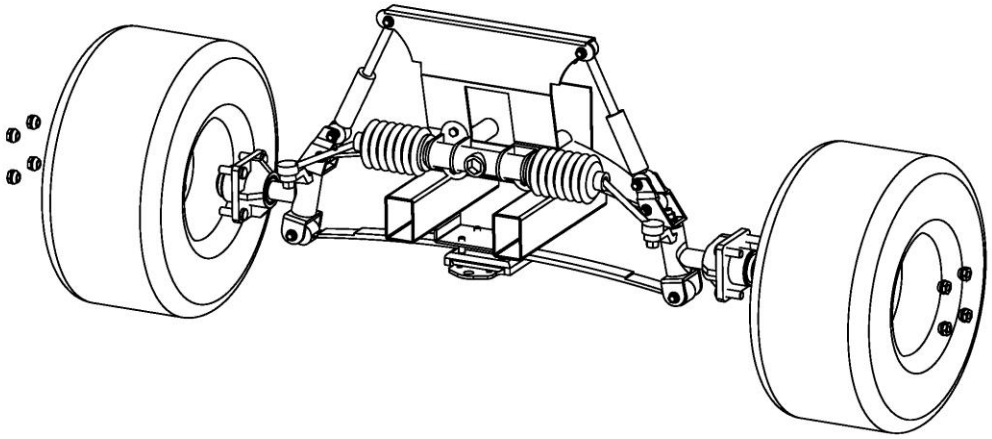

1. Remove lug nuts when cart on ground. Then raise the cart with jack stands under the frame. Remove wheel from the hub. Detach front bumper and retain hardware.

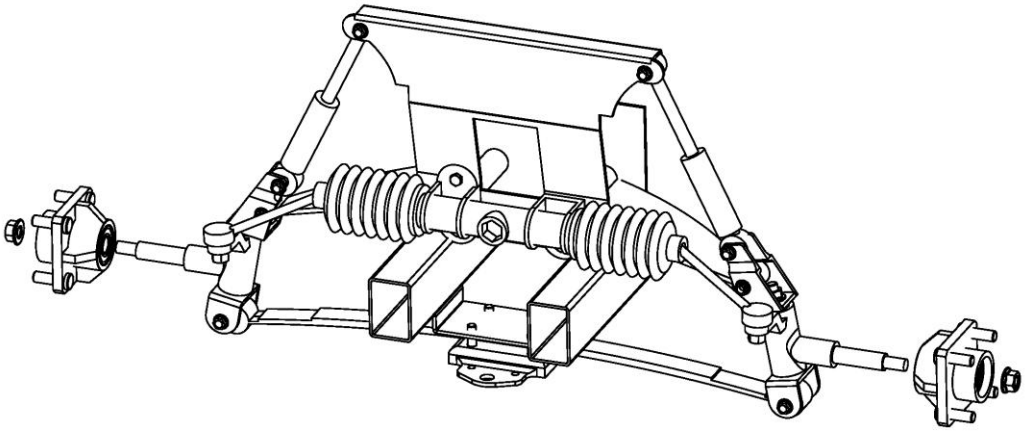

2. Using a 21mm socket remove and retain hub and flange nut. Repeat on passenger side.

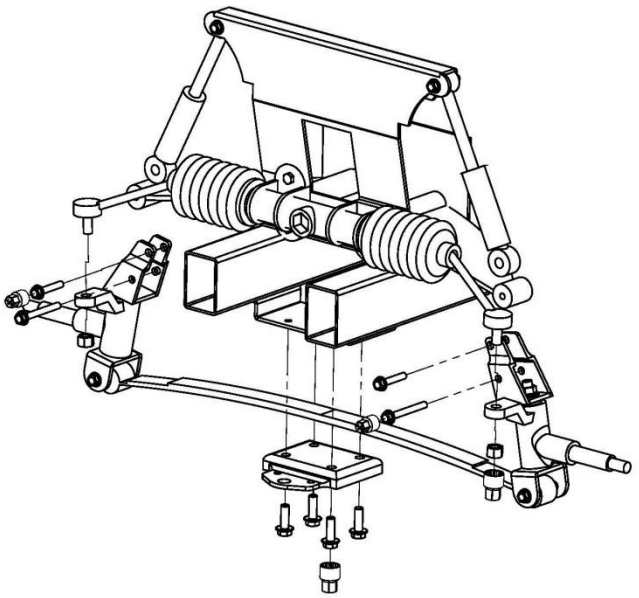

3. Using a 1/2” socket remove bolt from shock and retain. Push shock up and out of the way. Remove and retain the cotter pin from tie rod end, using an 18mm socket and 11/16” wrench. Remove nut from tie rod and retain.

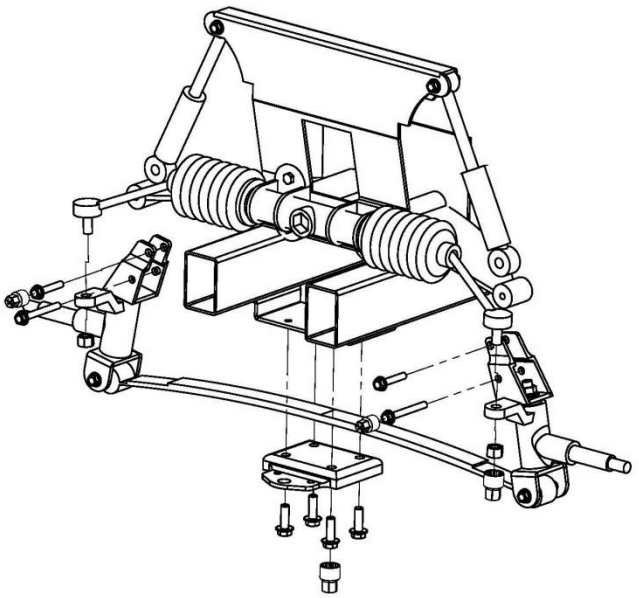

4. Using 1/2” socket remove factory spindle. Using a 1/2” socket remove spring plate and leaf spring.

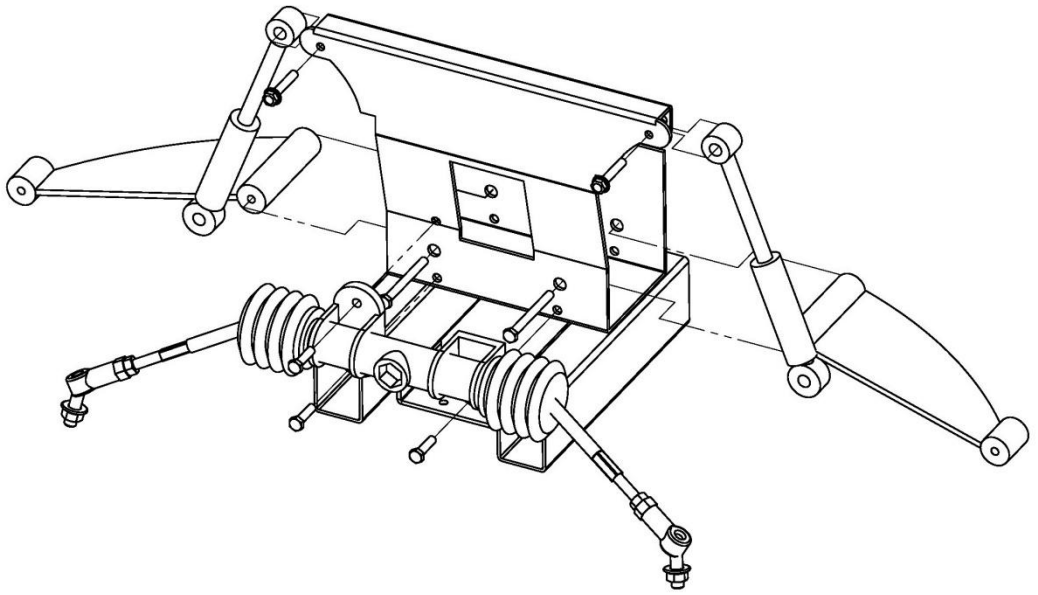

5. Remove rack and pinion, upper a-arm and factory shock absorber.

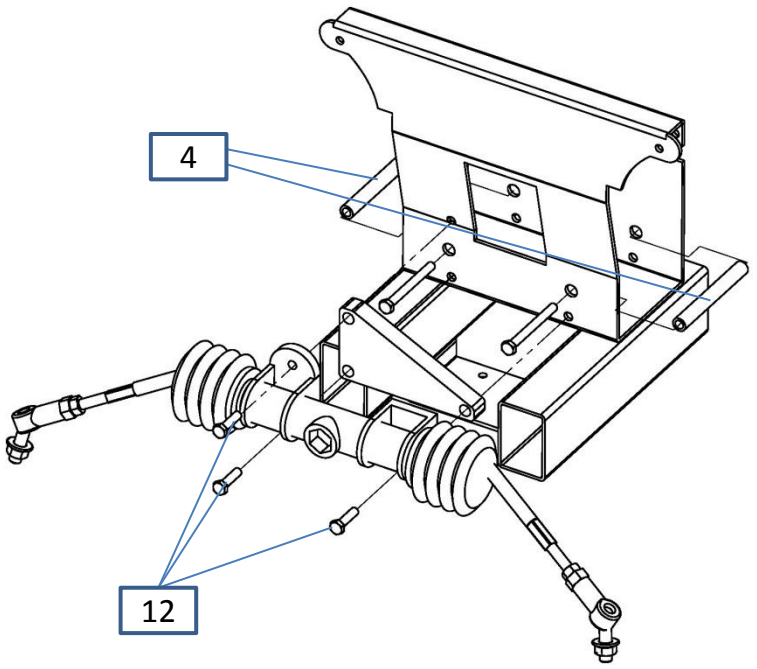

6. Reinstall rack and pinion and supplied spacer to cart frame using supplied hardware #12.

Place the support tube #4 between the holes where the factory a-arm was removed then use existing hardware to route through and secure.

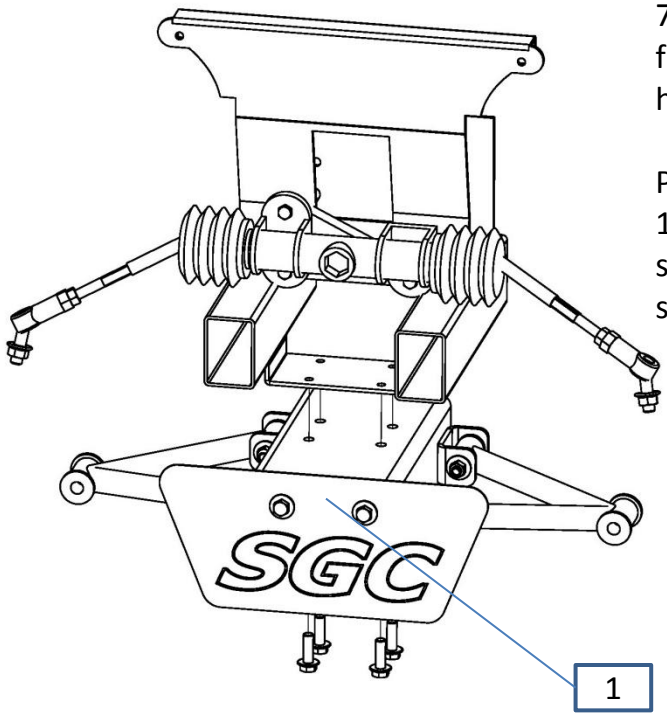

7. Attach main suspension frame #1 to cart using hardware from step 3.

Please disconnect the M12-100 bolt from a-arm on main suspension frame for use in step 9.

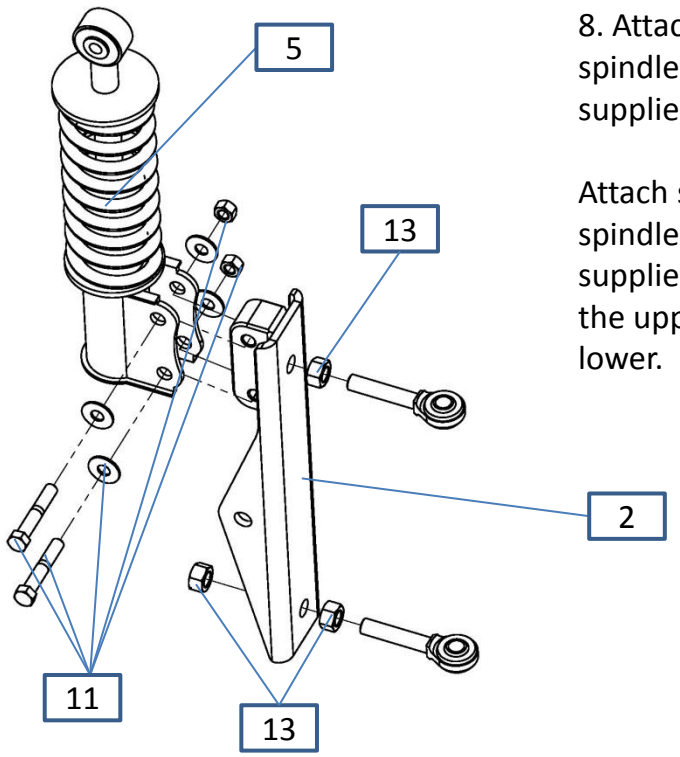

8. Attach shock absorber #5 to spindle bracket #2 using supplied hardware #11.

Attach supplied heim joint to spindle bracket #2 using supplied nuts #13. One nut on the upper and two on the lower.

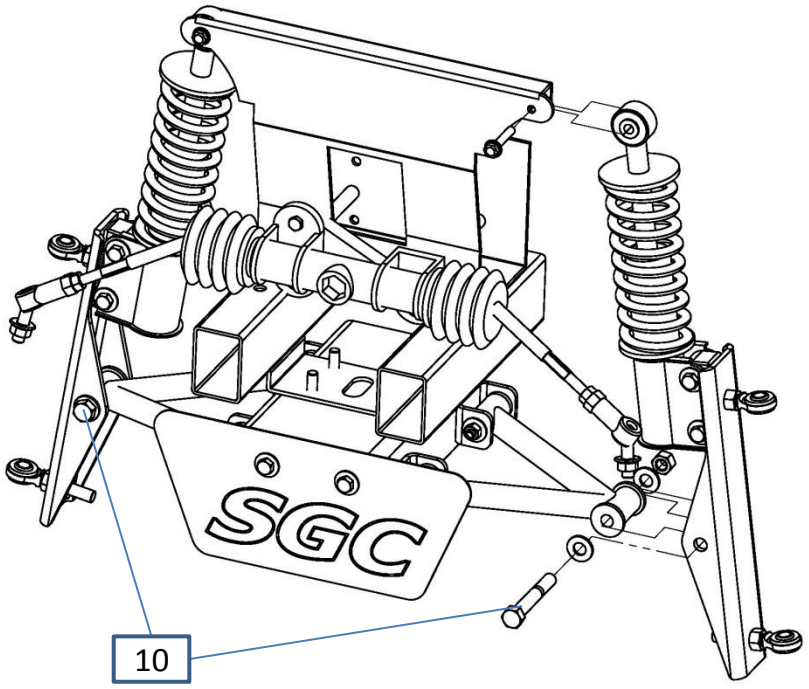

9. Attach spindle bracket #2 to upper a-arm from main suspension frame using supplied hardware #10 (detached in step 7). Attach top of shock absorber #5 to cart frame using factory hardware from step3.

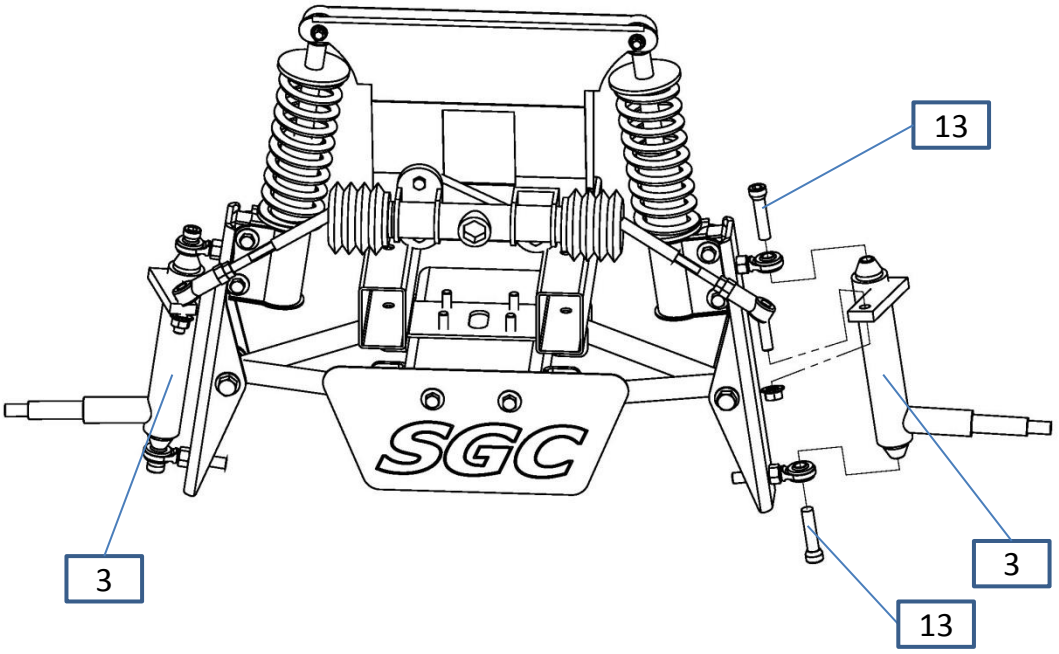

10. Install supplied spindle #3 on heim joint using supplied egg neck bolt #13. Attach tie-rod end to spindle using factory hardware.

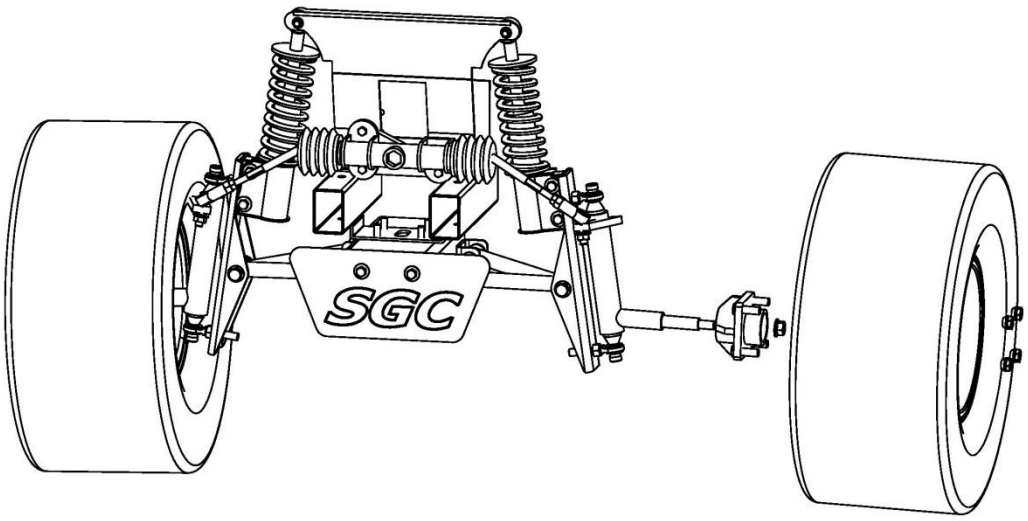

11. Reinstall hubs and install new large wheels.

Chock front wheels, then disengage parking brake. Lift rear of cart and support with jack stands under the frame. Remove rear wheels. Leave jack in place under axle and motor assembly.

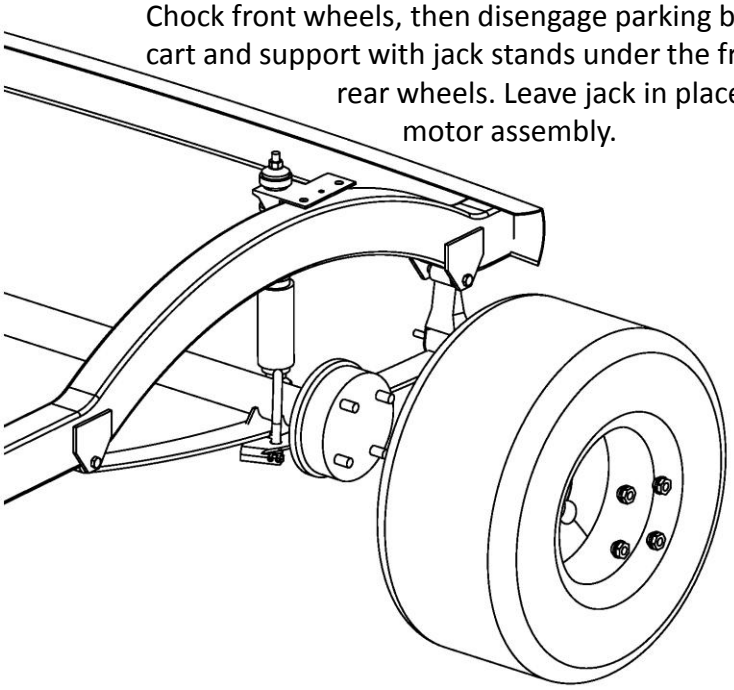

12. Remove rear wheels.

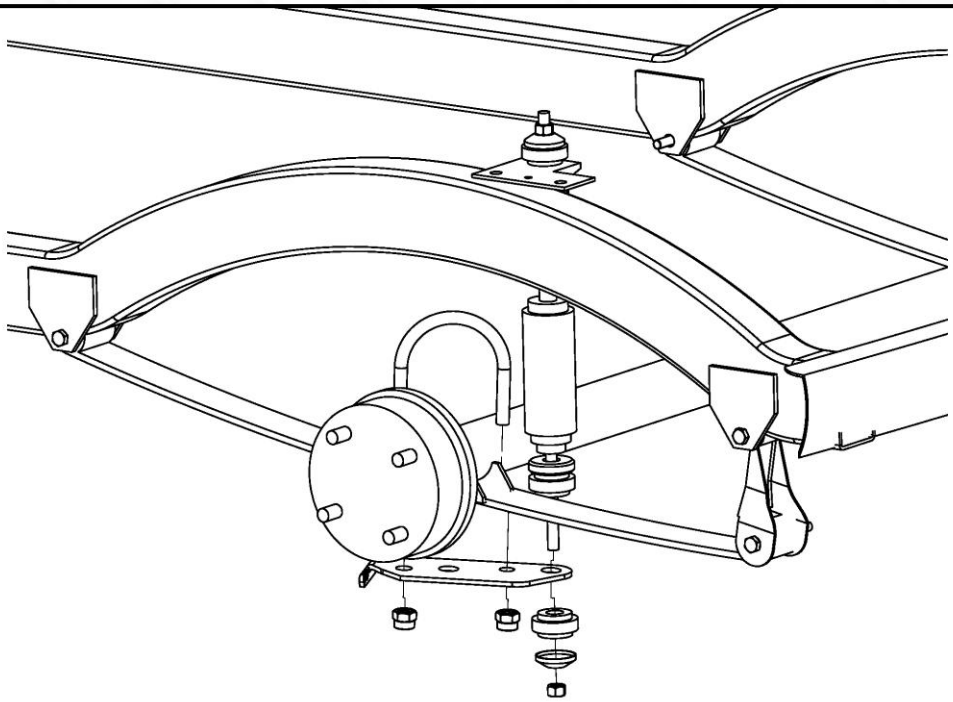

13. Using a 5/8” socket loosen the U-bolts on the passenger side. Don’t remove the U-bolts. It’s important to do one side at a time to avoid motor roll. Loosening but not removing the U-bolts will make this easier.

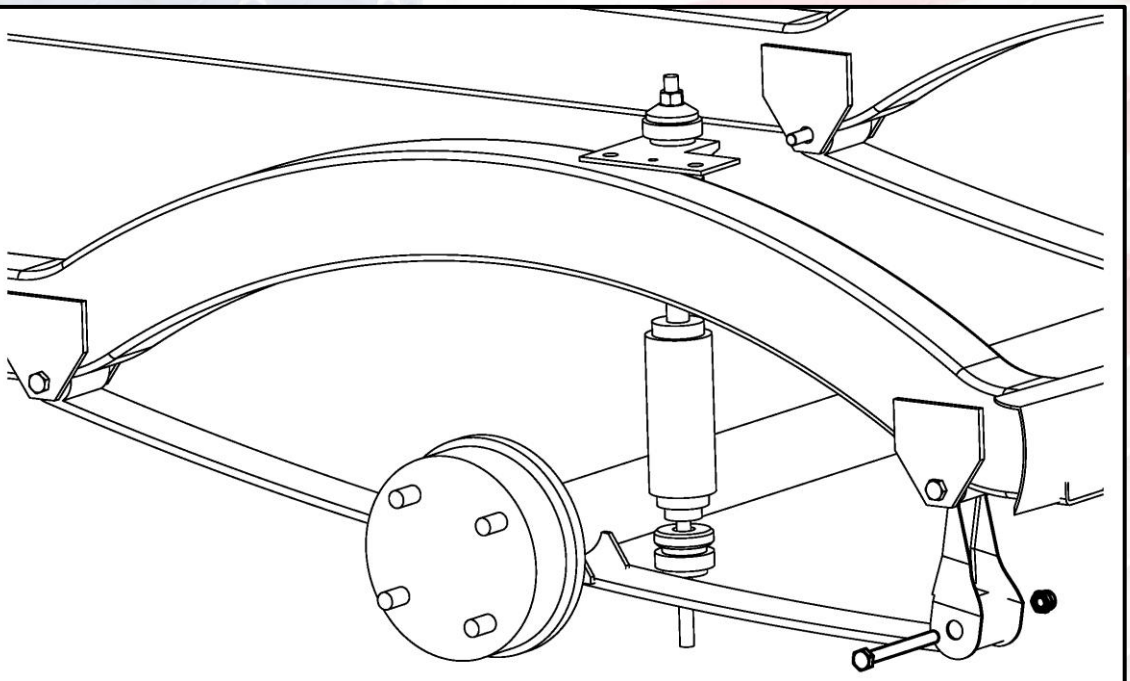

14. Using a 10mm socket and 13mm wrench remove hardware from rear leaf spring mount and front leaf spring mount. Retain hardware.

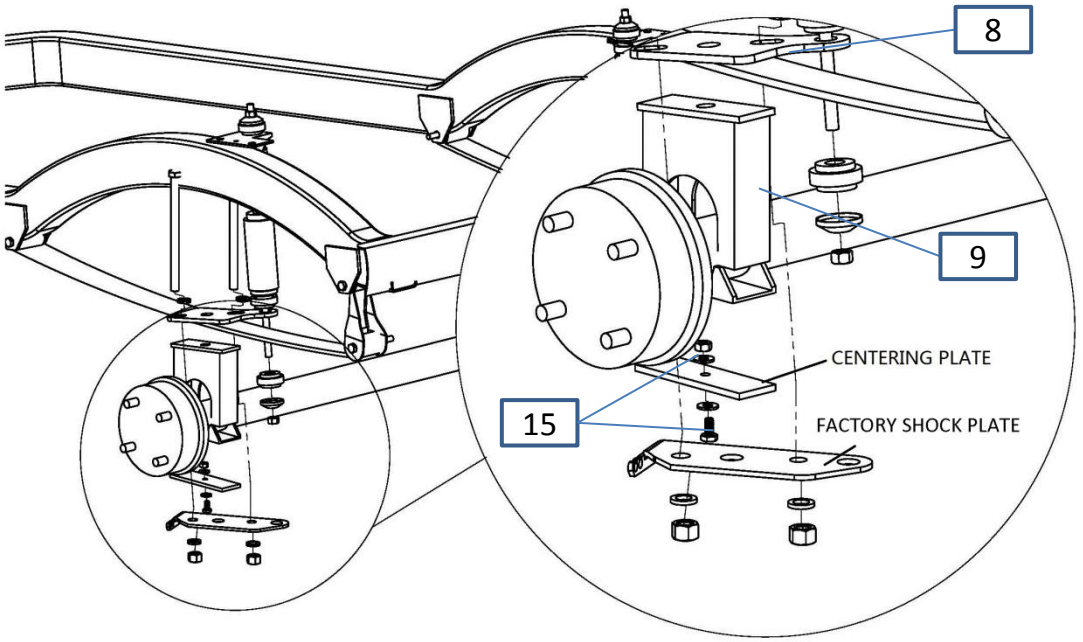

13. Place rear lift block #9 on the axle and under leaf spring. Ensure that top of lift block angles down toward the front of cart. Place rear shock plate #8 over leaf spring and attach shock to it. Attach hardware #15 on centering plate #6 then attach centering plate #7 to factory shock plate. The bolt head and nut will fit into the center hole of the spring perch and factory shock plate to aid in alignment of the riser and mounting plates.

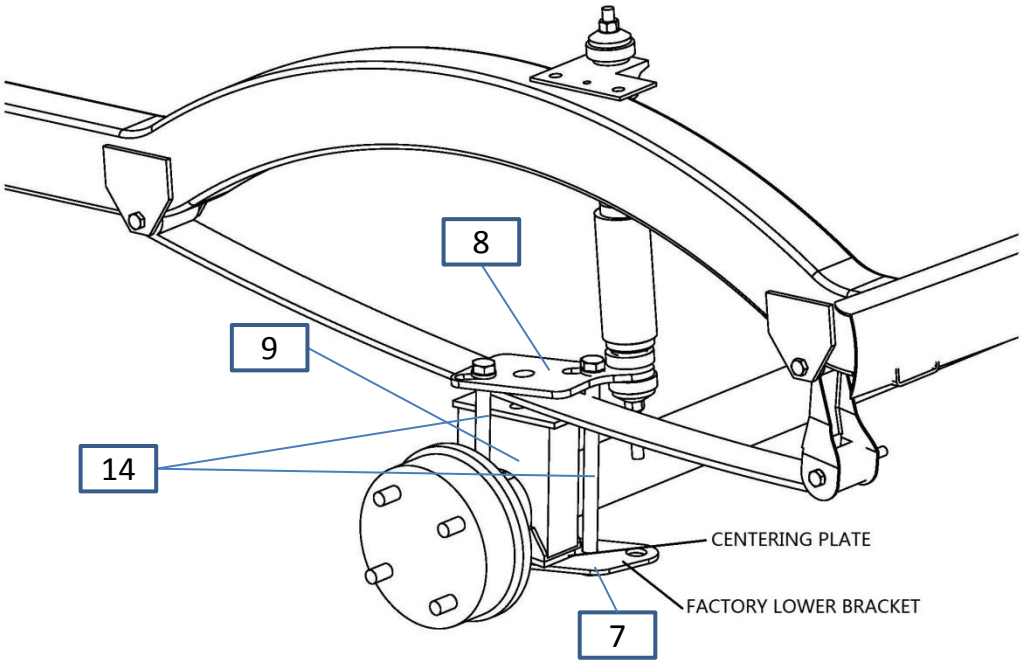

14. Route supplied bolts M12*180 through shock plate #8, rear lift block #9 and factory lower bracket making sure centering plate #7 fits properly. Using socket to tighten these four bolts evenly to ensure proper alignment.

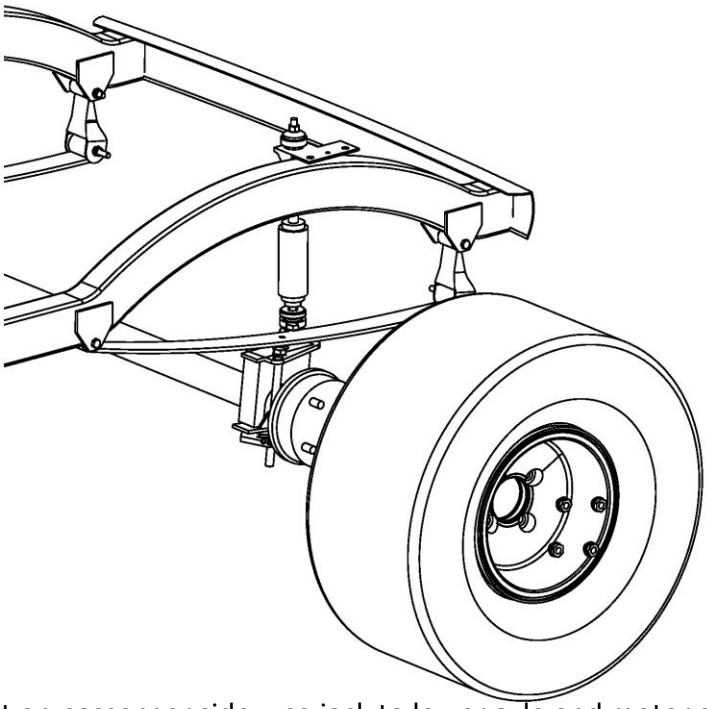

15. Repeat on passenger side, use jack to lower axle and motor assembly as needed. Once complete, install wheels, lower cart and proceed with alignment on next page.

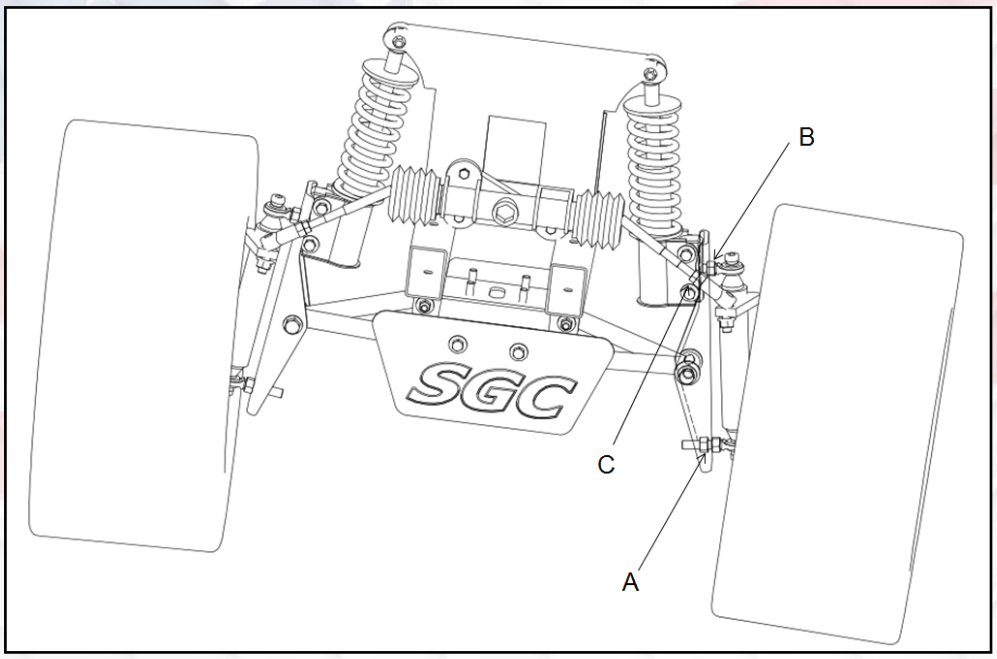

IMPORTANT: Both Camber and Toe must be adjusted on this model.

To adjust for proper camber (the vertical tilt of the wheels), use a framing square, level, or some other means of verifying that the tire is at a 90 degree angle to the ground.

Adjust camber to 90 degrees using the two nuts on the bottom rod-end bearing.

If adjusting the camber to 90 degrees is not possible using only the adjustment on the bottom rod-end bearing, then the top rod-end bearing must be disconnected from the spindle, rotated, then reassembled and checked as necessary to achieve the correct camber.

IMPORTANT: Be sure to retighten all adjustment points after adjustments are made.

To adjust Toe, ensure the wheels are pointing straight forward. Find a common point to measure from on the inside front and inside rear of the front tires. Adjust until the front measurement is 1/4” to 3/8” greater than the rear measurement.
Loosen nut on both tie rod ends. Adjust using a wrench to desired alignment.

If steering wheel is not properly oriented after adjusting toe-out, adjust steering box tie rod to align steering wheel if needed. Loosen tie rod lock nuts and turn steering box tie rod clockwise or counter clockwise to adjust steering wheel.

IMPORTANT: Ensure that after this adjustment, both wheels toe out from the cart’s centerline equally. Once tightened, roll the cart back 15-20 feet and then forward again to check.

NOTE: Be sure to use thread locking adhesive on upper and lower rod-end bearing spindle screws.

RETURN MERCHANDISE AUTHORIZATION

Dear Valued Customer,

Thank you for choosing Steeleng Golf Cart Accessories for your golf cart needs.

We apologize for the issues you are having with your purchase. We strive to offer the absolute best quality at the absolute best price.

To best serve you, we do need a little information to help process your return and/or exchange faster.

Please complete the following and include this entire form with your return.

_____
Name

_____ _____ _____
Shipped To Address STATE ZIP

Purchased with: eBay Direct Phone Order

This is for EXCHANGE REFUND

Please describe reason for return:-

_____
_____
_____
_____

Our Return Address:
Steeleng Golf Cart Accessories
3309 Laurens Road,
Greenville, SC 29607
Tele: 864-675-1103

For Office Use Only:
Received By:_____ Date_____
Refund Amount_____ Exchange Issued_____

**Steeleng Golf Cart Accessories reserves the right to charge a 15% restocking fee for all returned and/or exchanged items.